3 Input Single Stack Plumbing Diagram

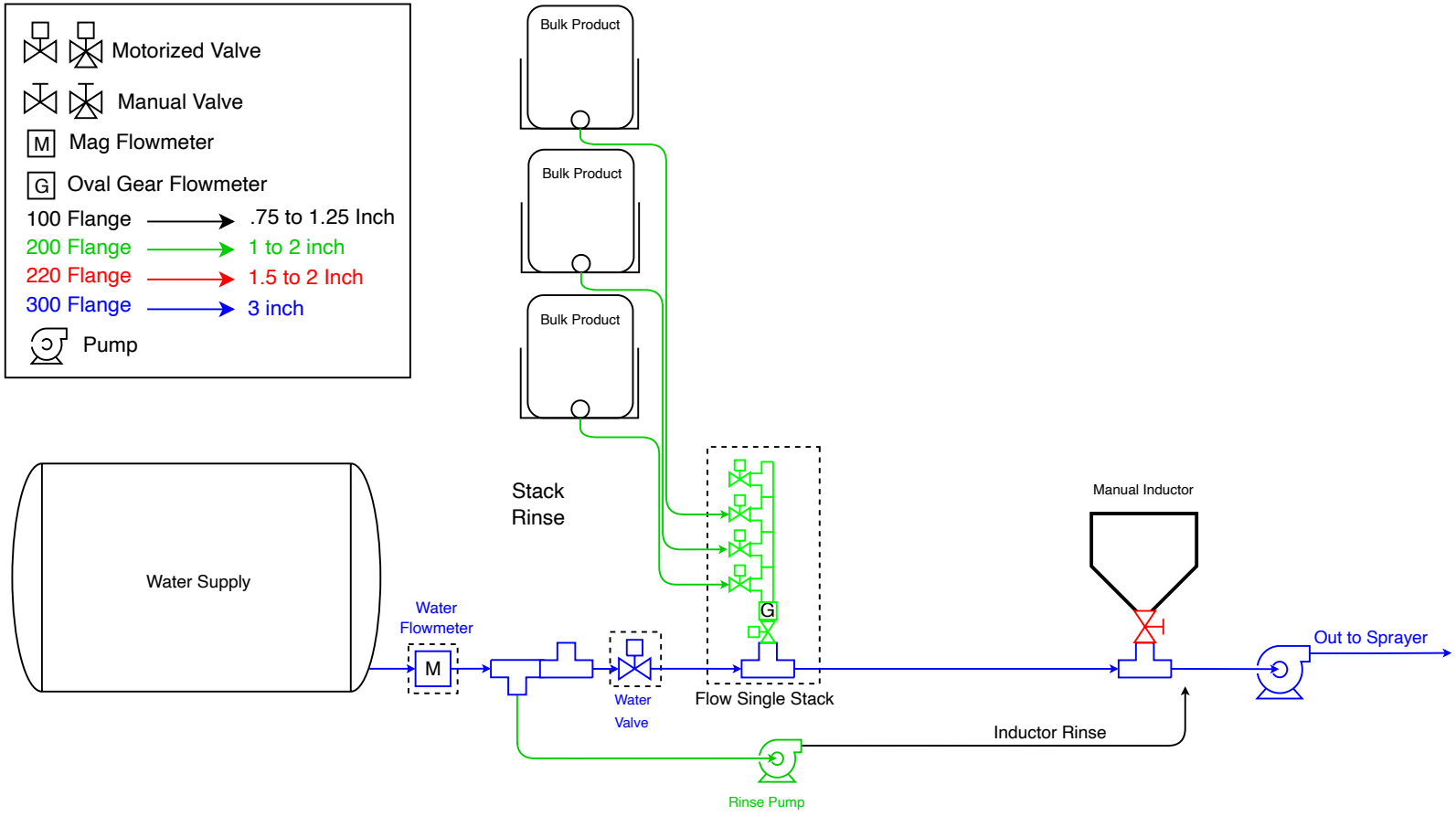

Mixmate three input Single Stack. All chemicals are measured with a gear type flowmeter. Up to one bulk chemicals will be measured simultaneously while using the inductor. Consult your dealer for variations to this configuration.